# SANSUI AU-555A SCHEMATIC DIAGRAM

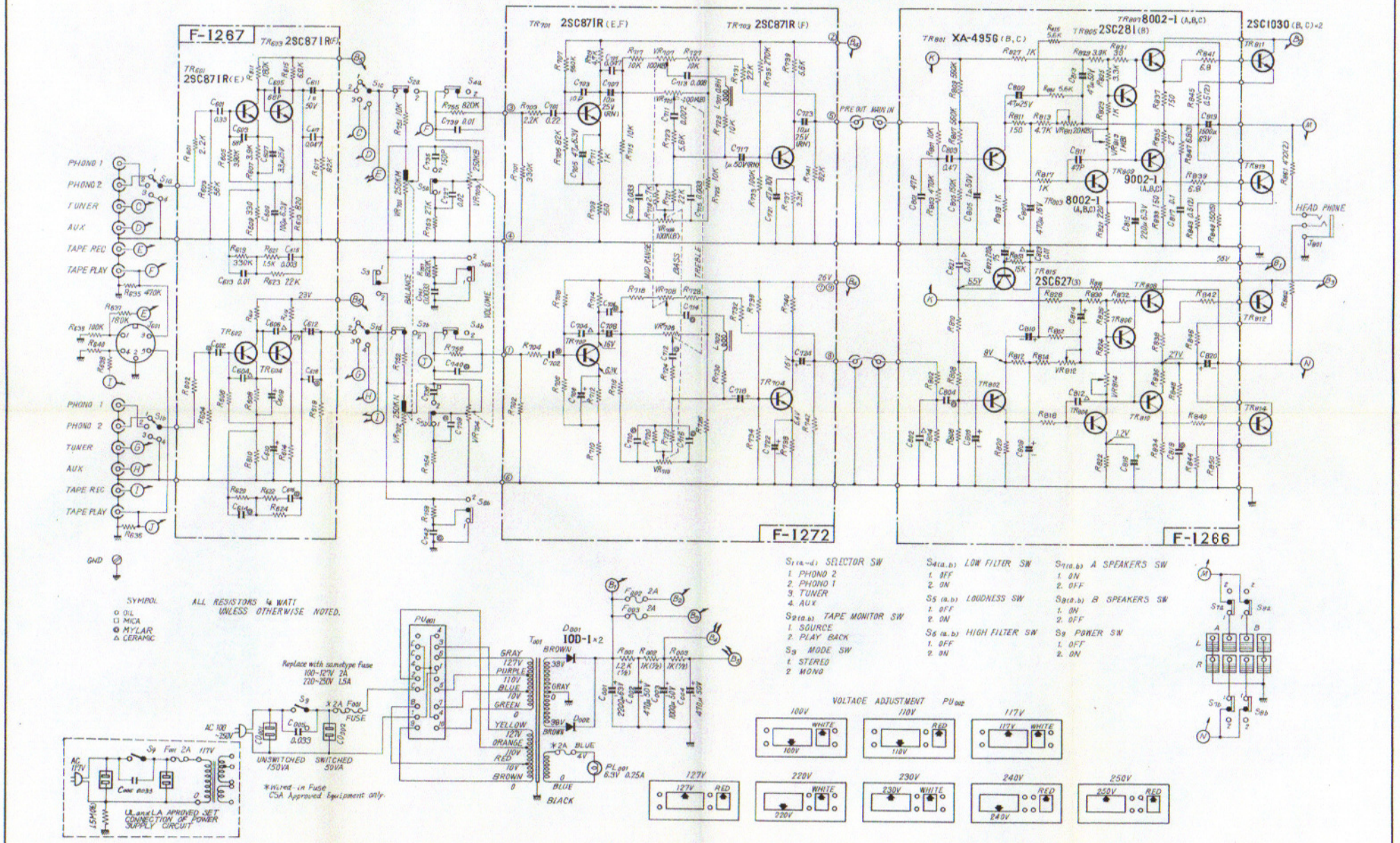


* Manufacturer reserves right to change design and/or specifications without notice for purpose of improvement.

SANSUI ELECTRIC COMPANY LIMITED

Printed in Japan (S1030M8)