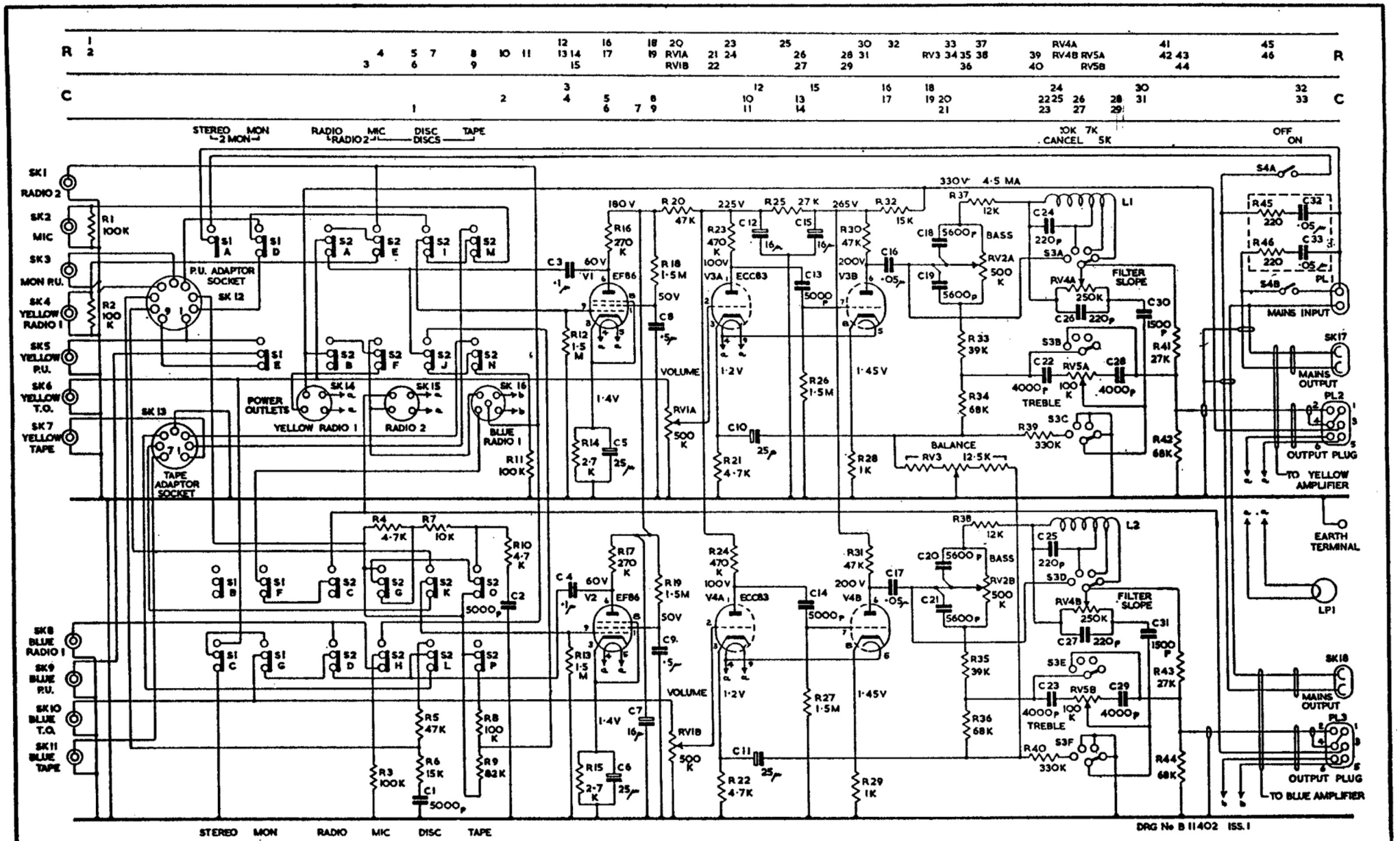

THE VOLTAGE AND CURRENT MEASUREMENTS SHEWN ARE APPROXIMATE, AND ARE ONLY PROVIDED AS A GUIDE. ALLOWANCE SHOULD BE MADE FOR THE LOADING EFFECTS OF A VOLTMETER.

QUAD 22 CONTROL UNIT CIRCUIT DIAGRAM

Amendment December, 1959

C 13, C 14 } now 820 pF

C 16, C 17 } now .1 uF

C 34, C 35 } added .02 uF in series with volume control.