BASIC AMPLIFIER CIRCUIT 25 WATTS

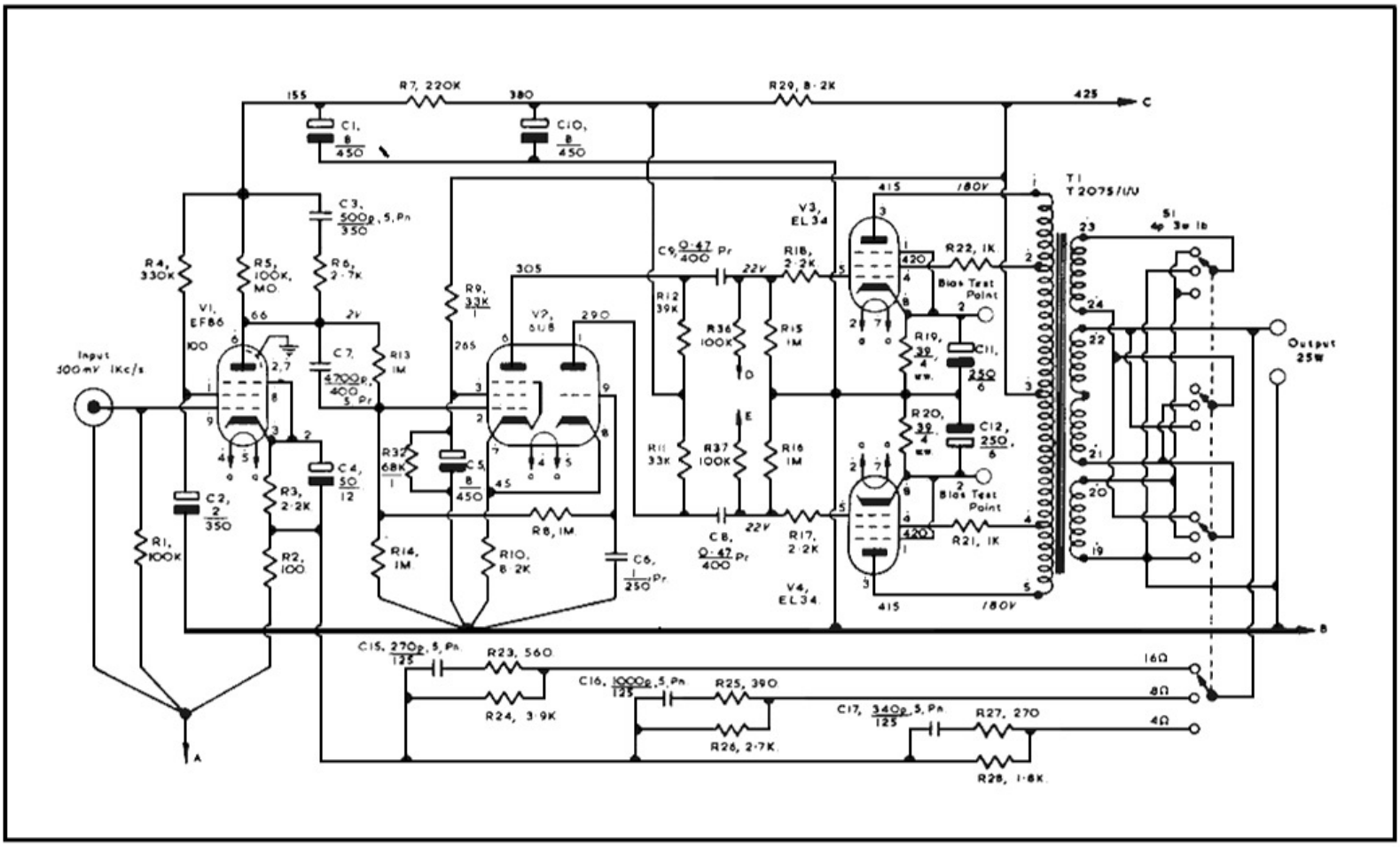

POWER SUPPLY

MA 25

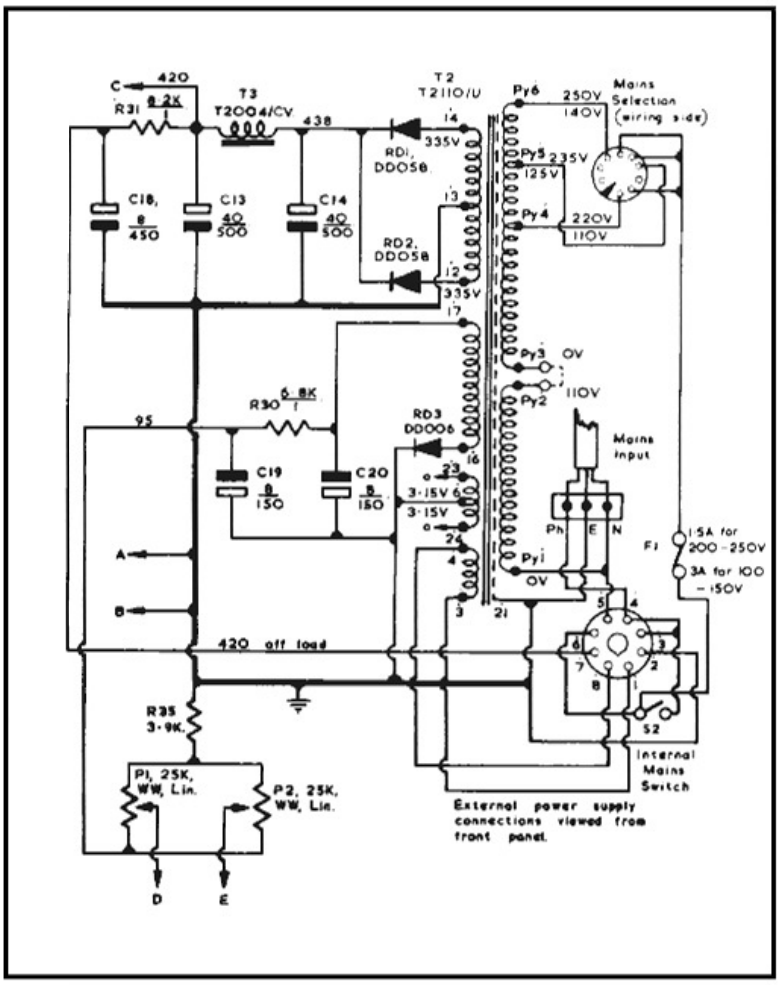
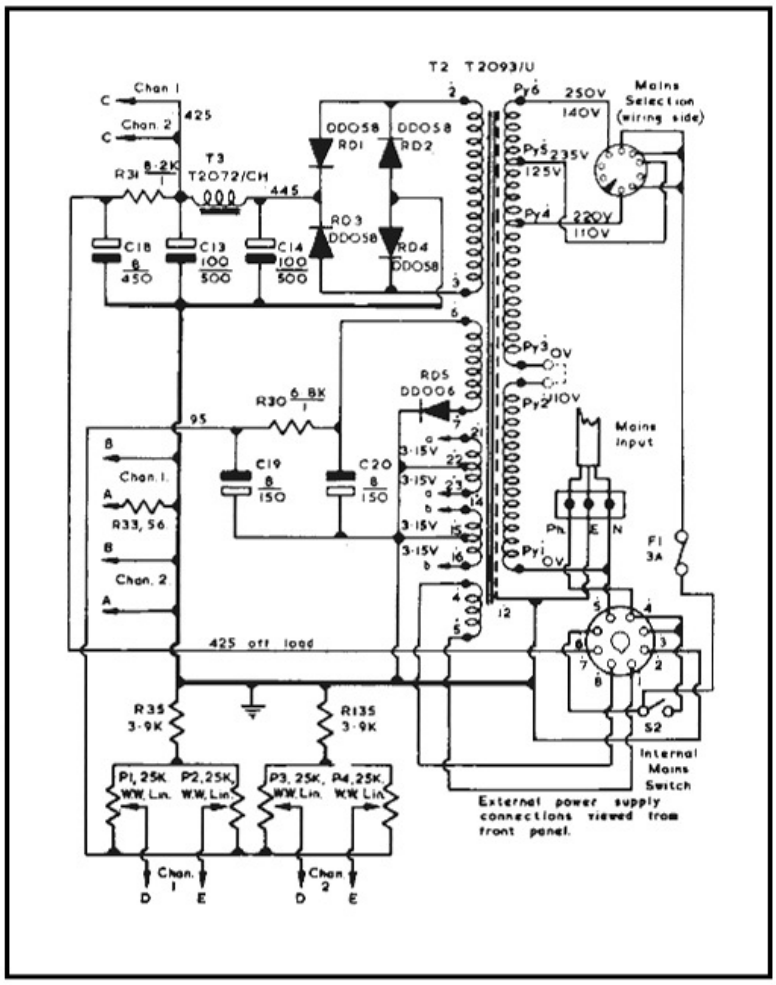
STA 25