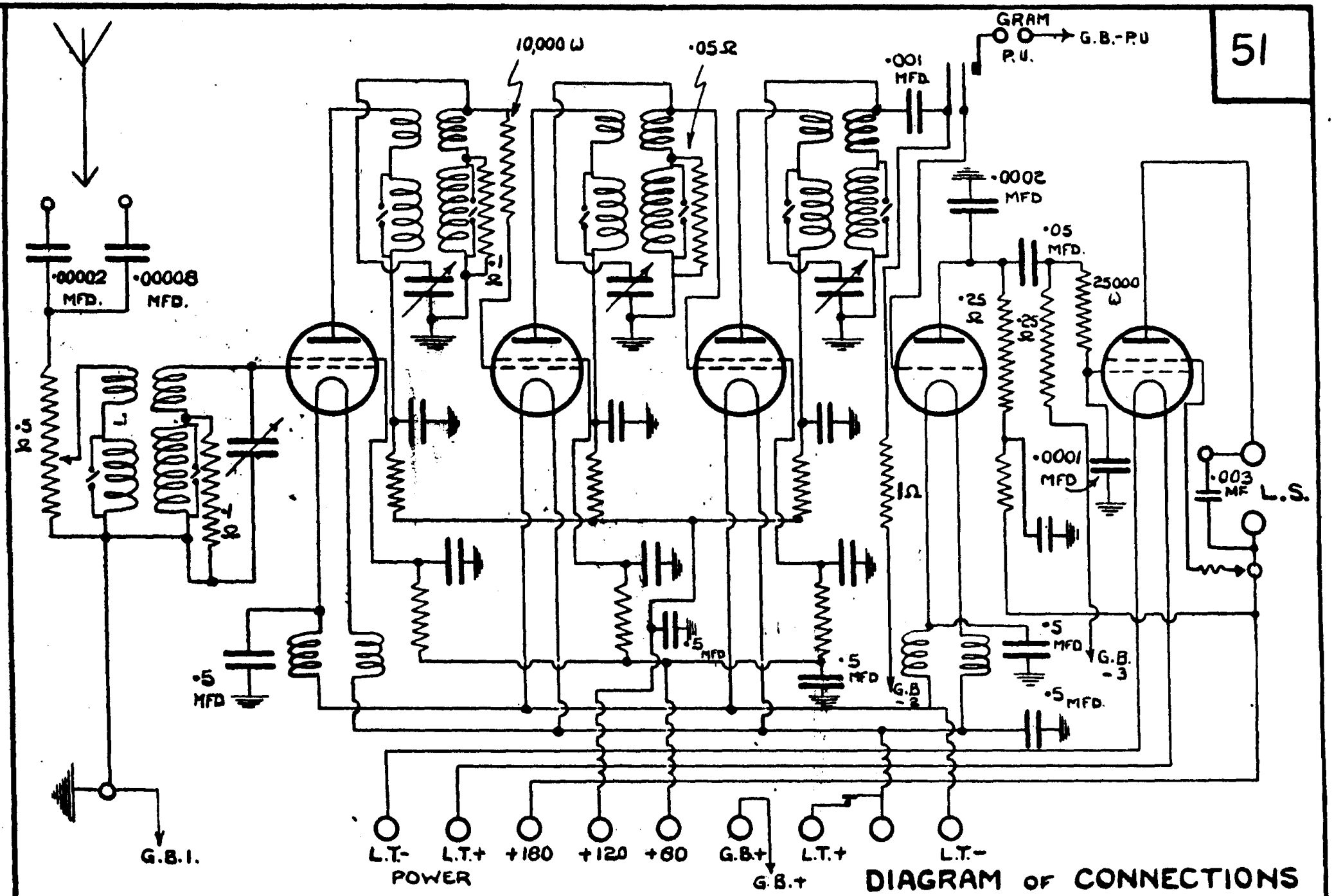

DIAGRAM OF CONNECTIONS
RECEIVER MODEL 56

⏚ DENOTES EARTHED TO SCREEN