DIAGRAM OF CONNECTIONS

POWER AMPLIFIER
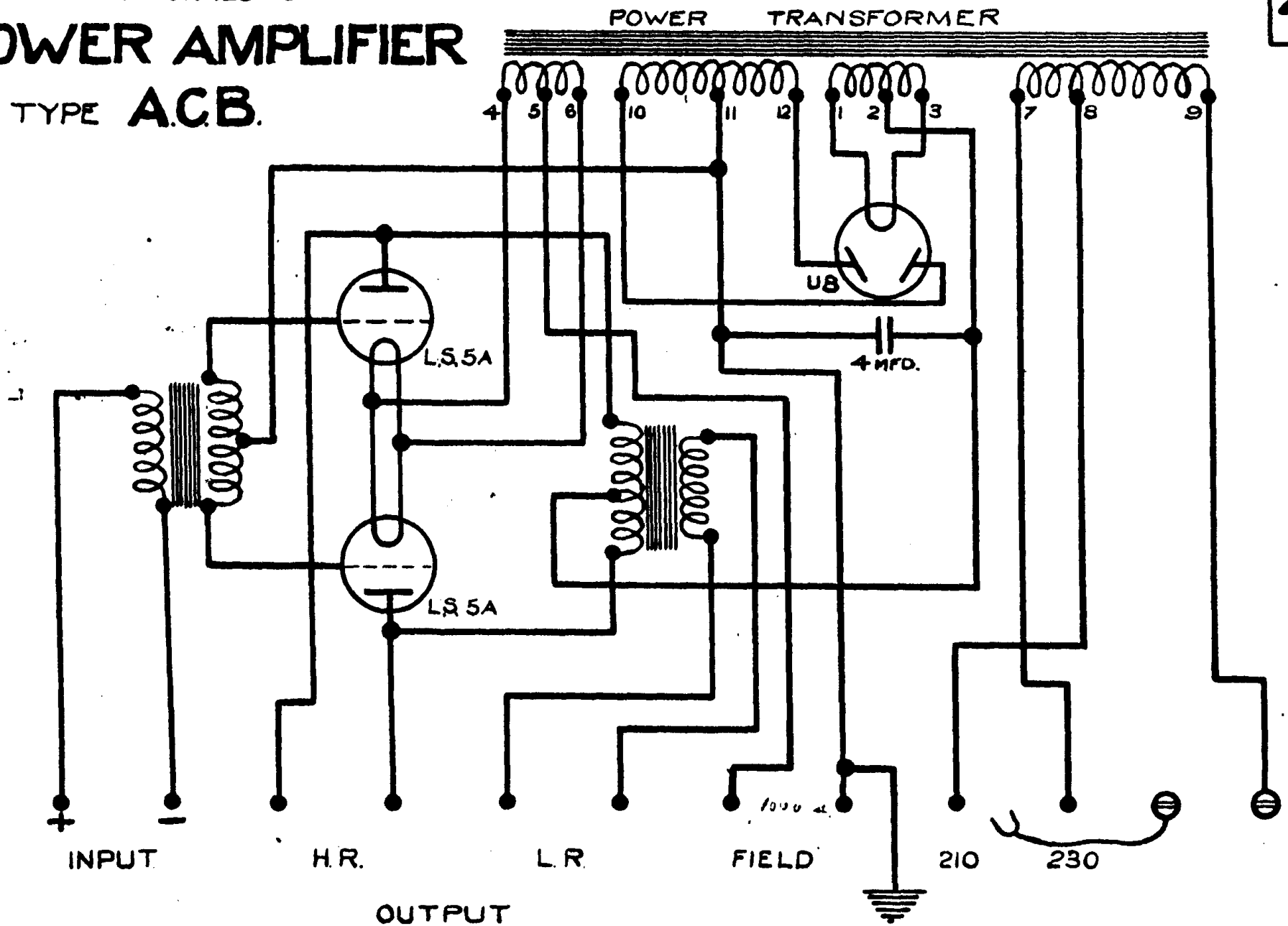
TYPE **A.C.B.**