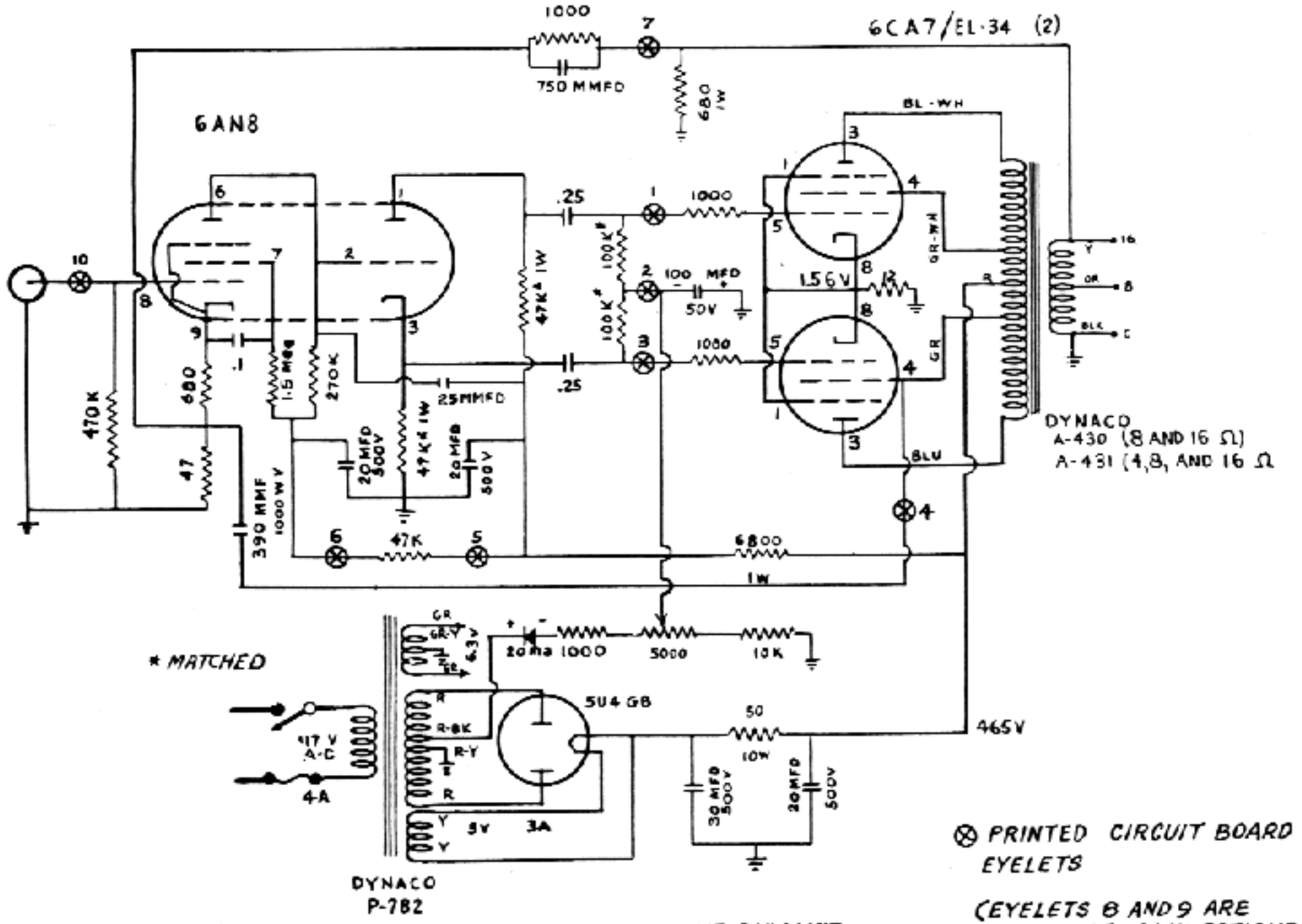

DYNACO CIRCUIT AS USED IN THE DYNAKIT