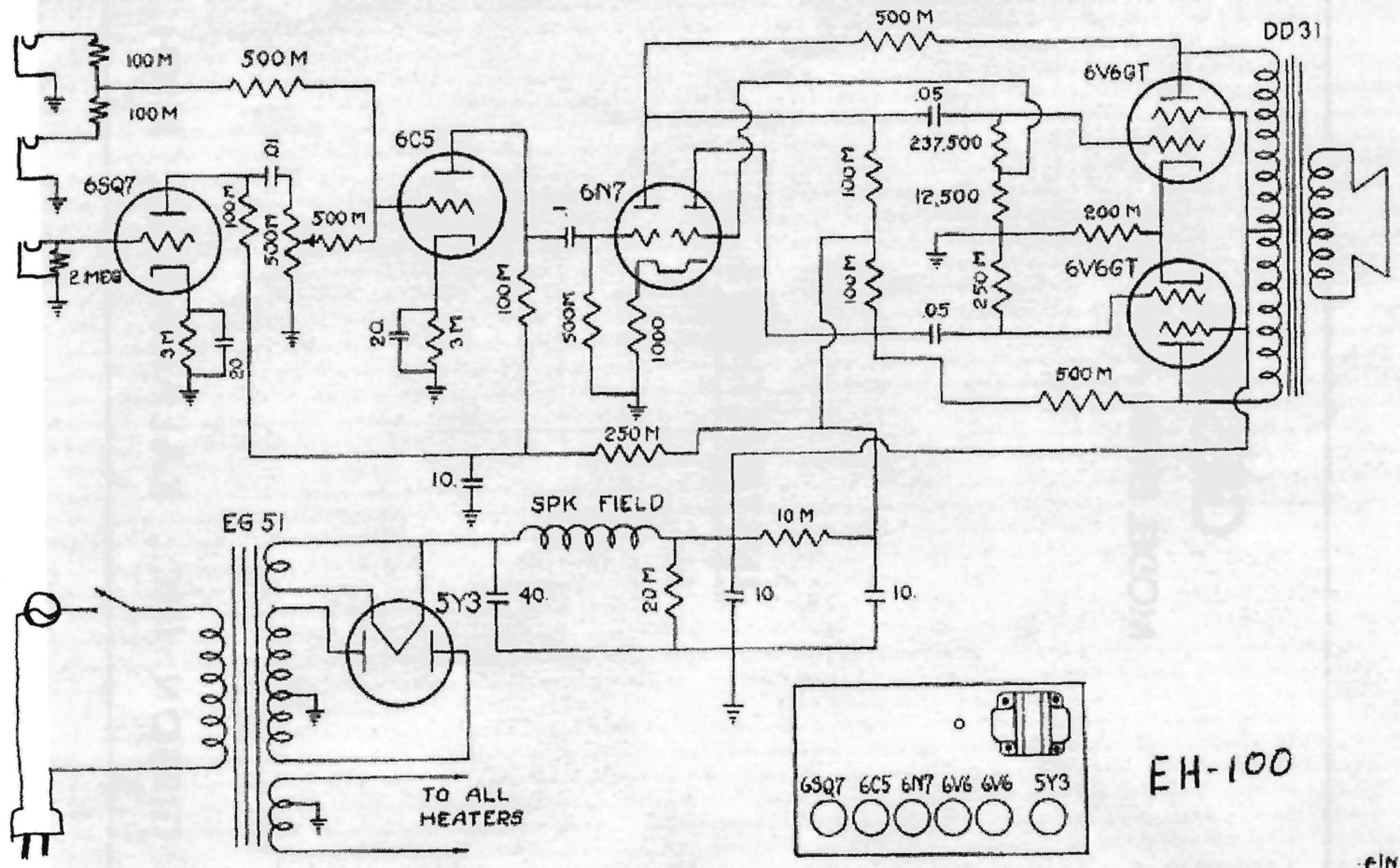

100 M
100 M
500 M
6SQ7
2 MEG
3 M
20
.01
100 M
500 M
500 M
6C5
20
3 M
100 M
.1
6N7
500 M
1000
250 M
10.
500 M
DD31
6V6GT
.05
237,500
12,500
100 M
100 M
200 M
250 M
6V6GT
.05
500 M
SPK FIELD
10 M
EG 51
5Y3
40.
20 M
10
10.
TO ALL HEATERS
6SQ7 6C5 6N7 6V6 6V6 5Y3

EH-100