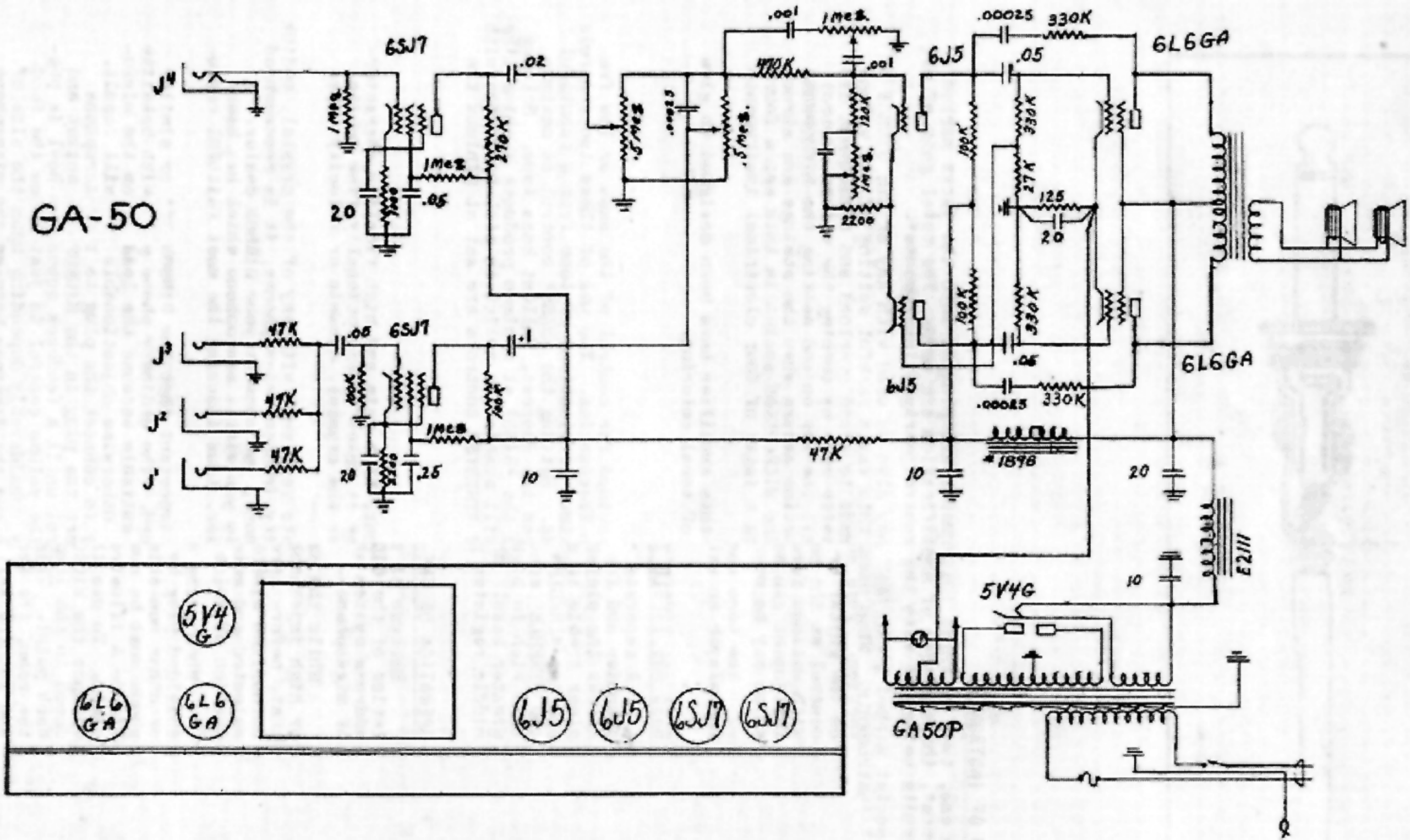
GA-50
6SJ7
6J5
6L6GA
5V4G
GA50P
E2111
#1898
J4
J3
J2
J1
1Meg.
.02
.001
.00025
330K
.05
470K
120K
100K
27K
125
20
2200
47K
.1
.25
10
5V4 G
6L6 GA
6J5
6SJ7