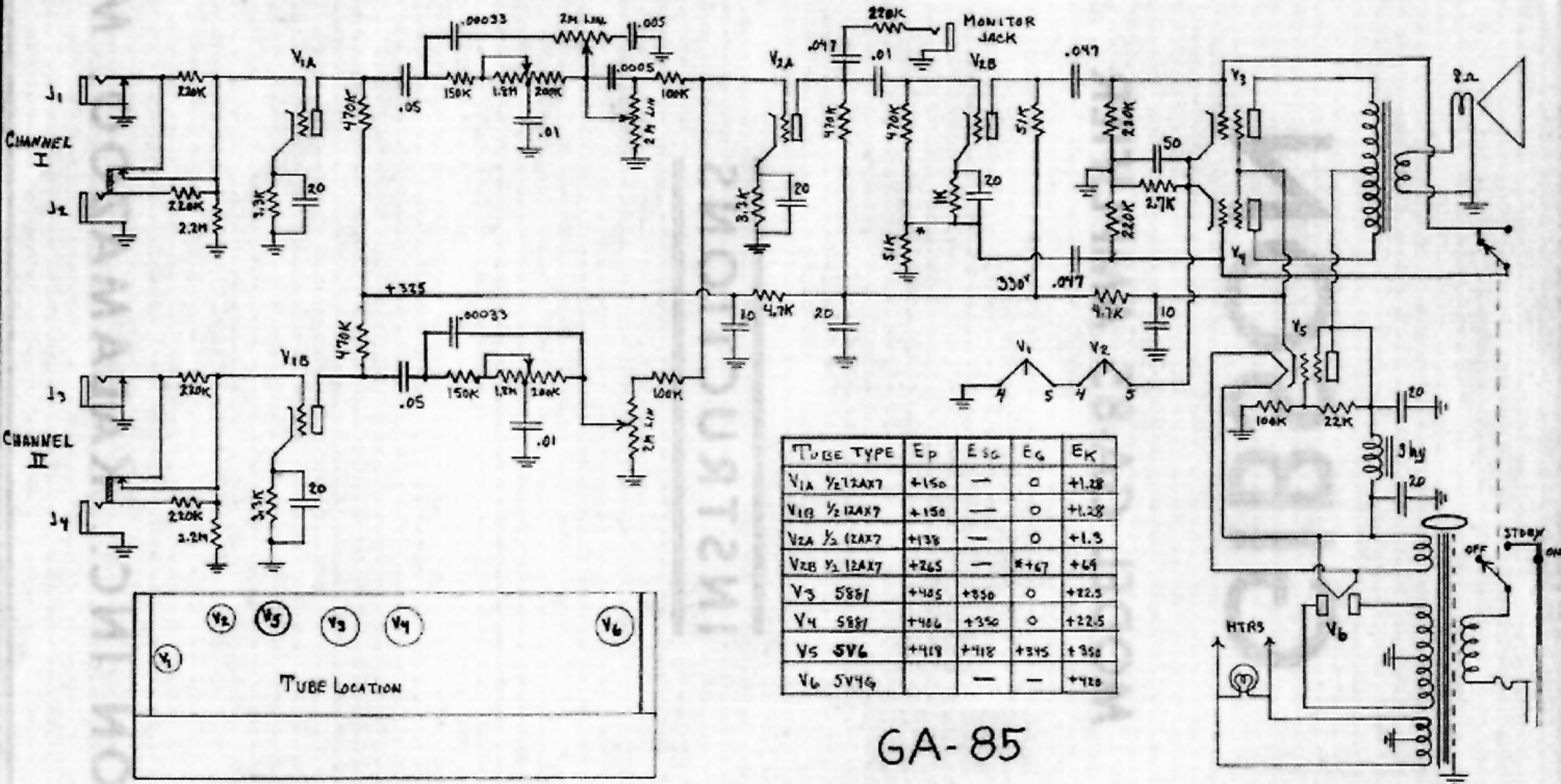

TUBE TYPE	E_P	E_{SG}	E_G	E_K
V_{1A} ½ 12AX7	+150	—	0	+1.28
V_{1B} ½ 12AX7	+150	—	0	+1.28
V_{2A} ½ 12AX7	+138	—	0	+1.3
V_{2B} ½ 12AX7	+265	—	*+67	+69
V_3 5881	+405	+350	0	+22.5
V_4 5881	+406	+350	0	+22.5
V_5 5V6	+418	+418	+345	+350
V_6 5V4G		—	—	+420

GA-85

GA-85

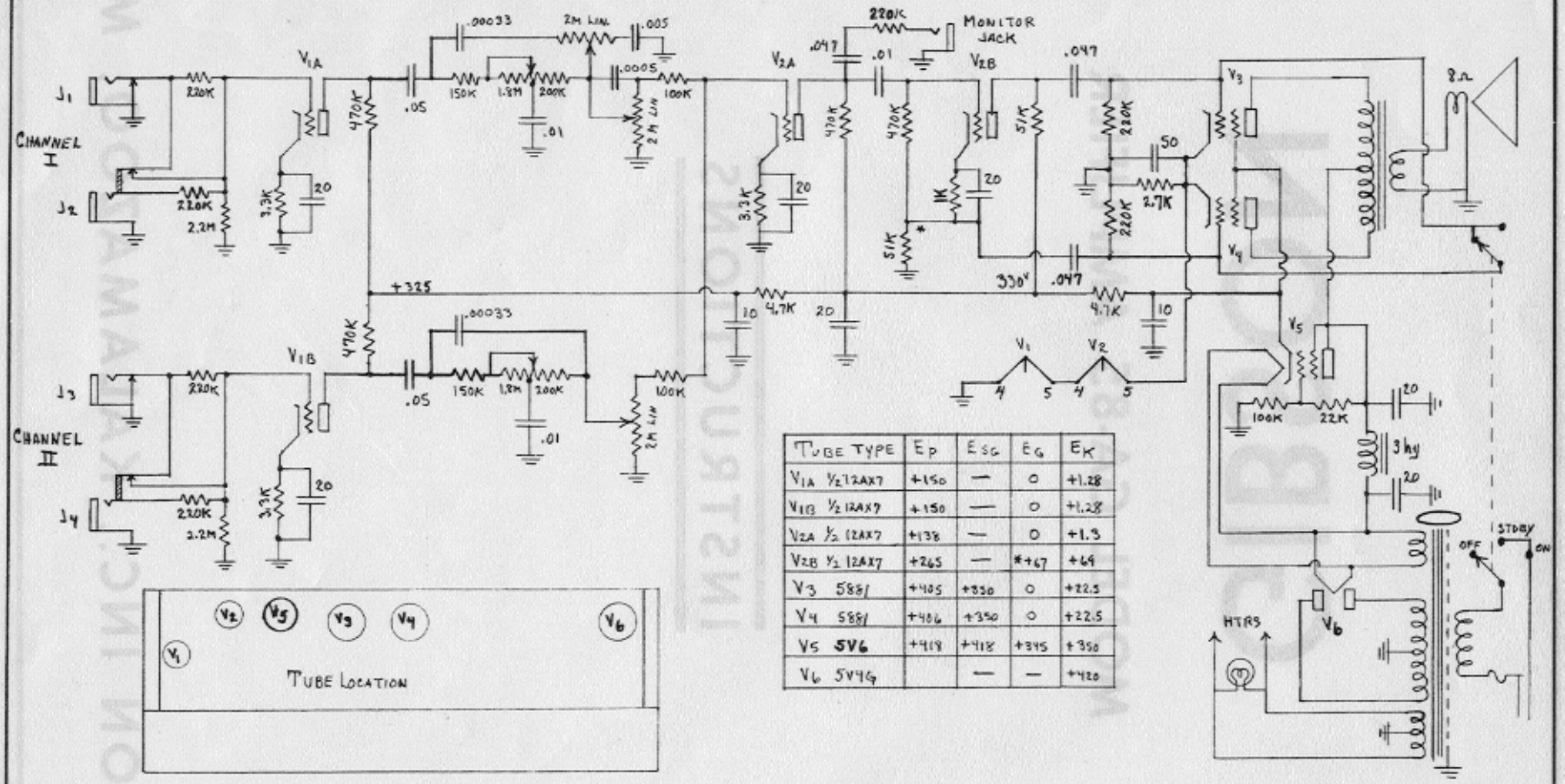

TUBE TYPE	Ep	Esg	Eg	Ek
V1A ½ 12AX7	+150	—	0	+1.28
V1B ½ 12AX7	+150	—	0	+1.28
V2A ½ 12AX7	+138	—	0	+1.3
V2B ½ 12AX7	+265	—	*+67	+69
V3 5881	+405	+330	0	+22.5
V4 5881	+406	+350	0	+22.5
V5 5V6	+418	+418	+345	+350
V6 5Y4G		—	—	+420