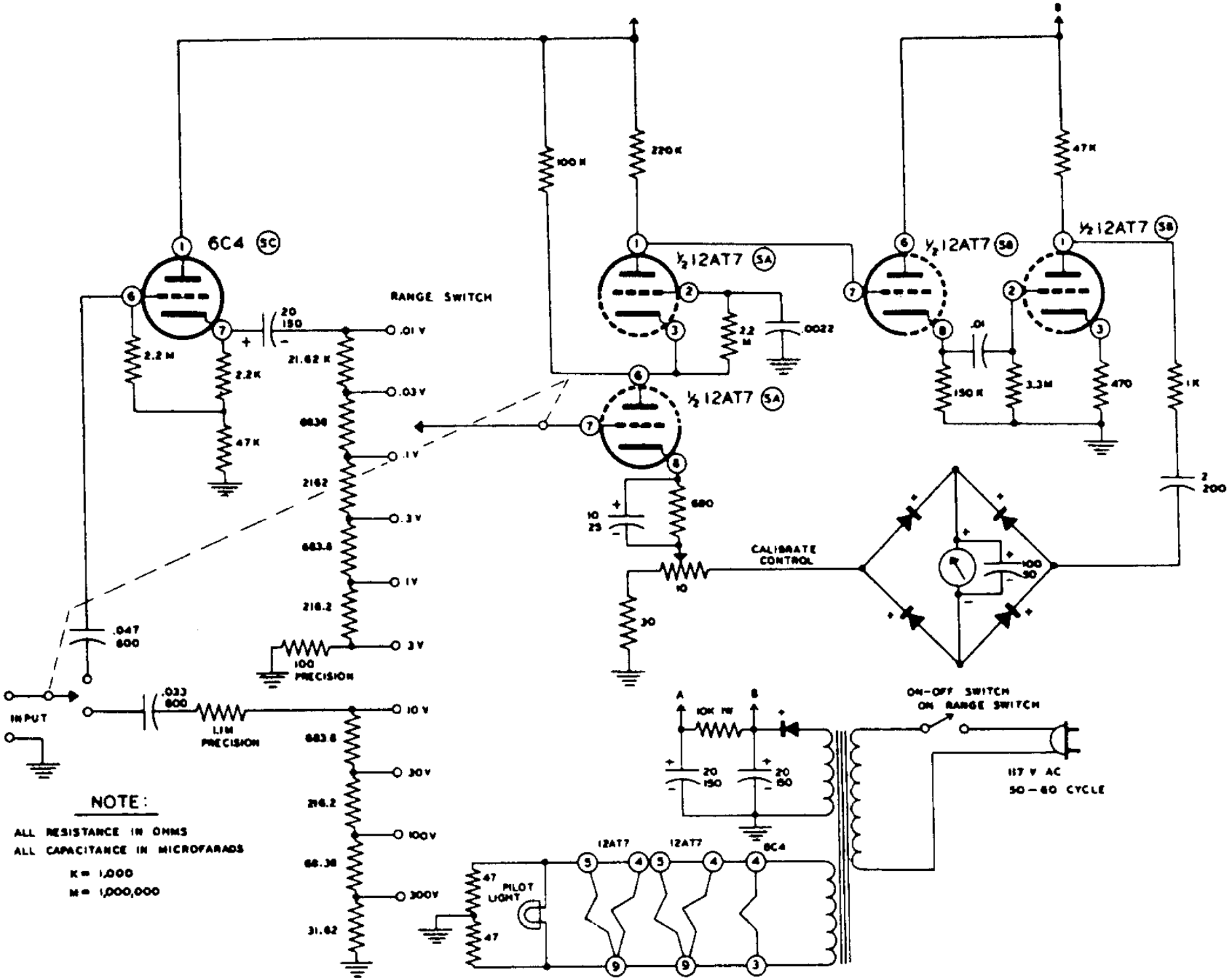
6C4 5C
½ 12AT7 5A
½ 12AT7 5A
½ 12AT7 5B
½ 12AT7 5B
RANGE SWITCH
.01 V
.03 V
.1 V
.3 V
1 V
3 V
10 V
30 V
100 V
300 V
21.62 K
6836
2162
683.6
216.2
68.36
31.62
100 PRECISION
LIM PRECISION
INPUT
.047 600
.033 600
20 150
2.2 M
2.2 K
47 K
100 K
220 K
2.2 M
.0022
680
10 25
10
30
CALIBRATE CONTROL
100 50
.01
150 K
3.3 M
470
47 K
1 K
2 200
10K 1W
20 150
20 150
ON-OFF SWITCH ON RANGE SWITCH
117 V AC 50-60 CYCLE
12AT7
12AT7
6C4
PILOT LIGHT
47
47
NOTE:
ALL RESISTANCE IN OHMS
ALL CAPACITANCE IN MICROFARADS
K = 1,000
M = 1,000,000