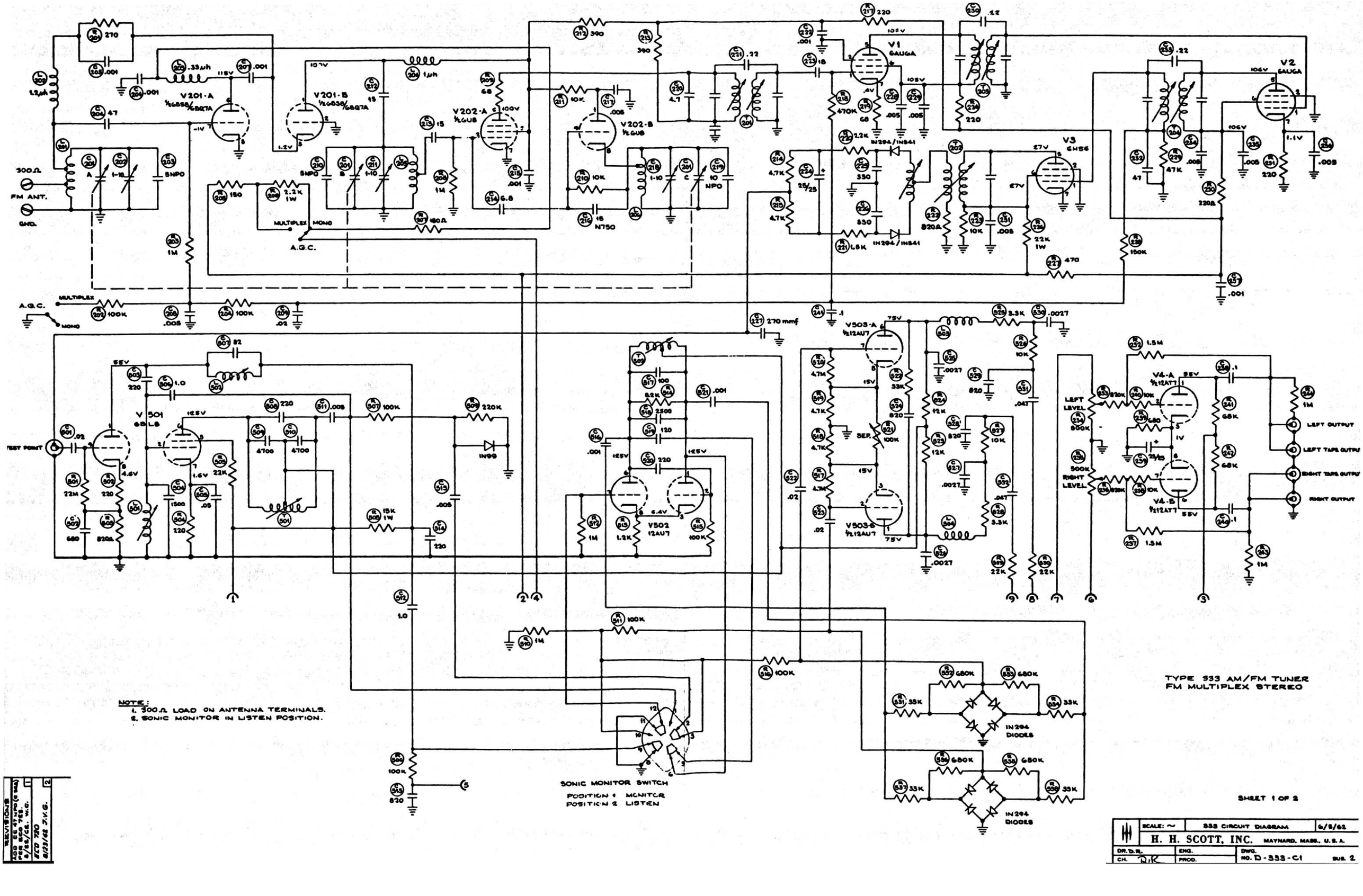

NOTE:
1. 300Ω LOAD ON ANTENNA TERMINALS.
2. SONIC MONITOR IN LISTEN POSITION.

TYPE 333 AM/FM TUNER
FM MULTIPLEX STEREO

SHEET 1 OF 2

SCALE: ~	333 CIRCUIT DIAGRAM		6/5/62
H. H. SCOTT, INC. MAYNARD, MASS., U.S.A.			
DR. D.R.	ENG.	DWG. NO. D-333-C1	SUB. 2
CH. D.R.	PROD.		

REVISIONS
ADD CC 47 NPO (2 SEC) PER ECO 723. 6/22/62. W.C. 1
ECO 720 8/23/62 J.V.G. 2