# T 523 GWL

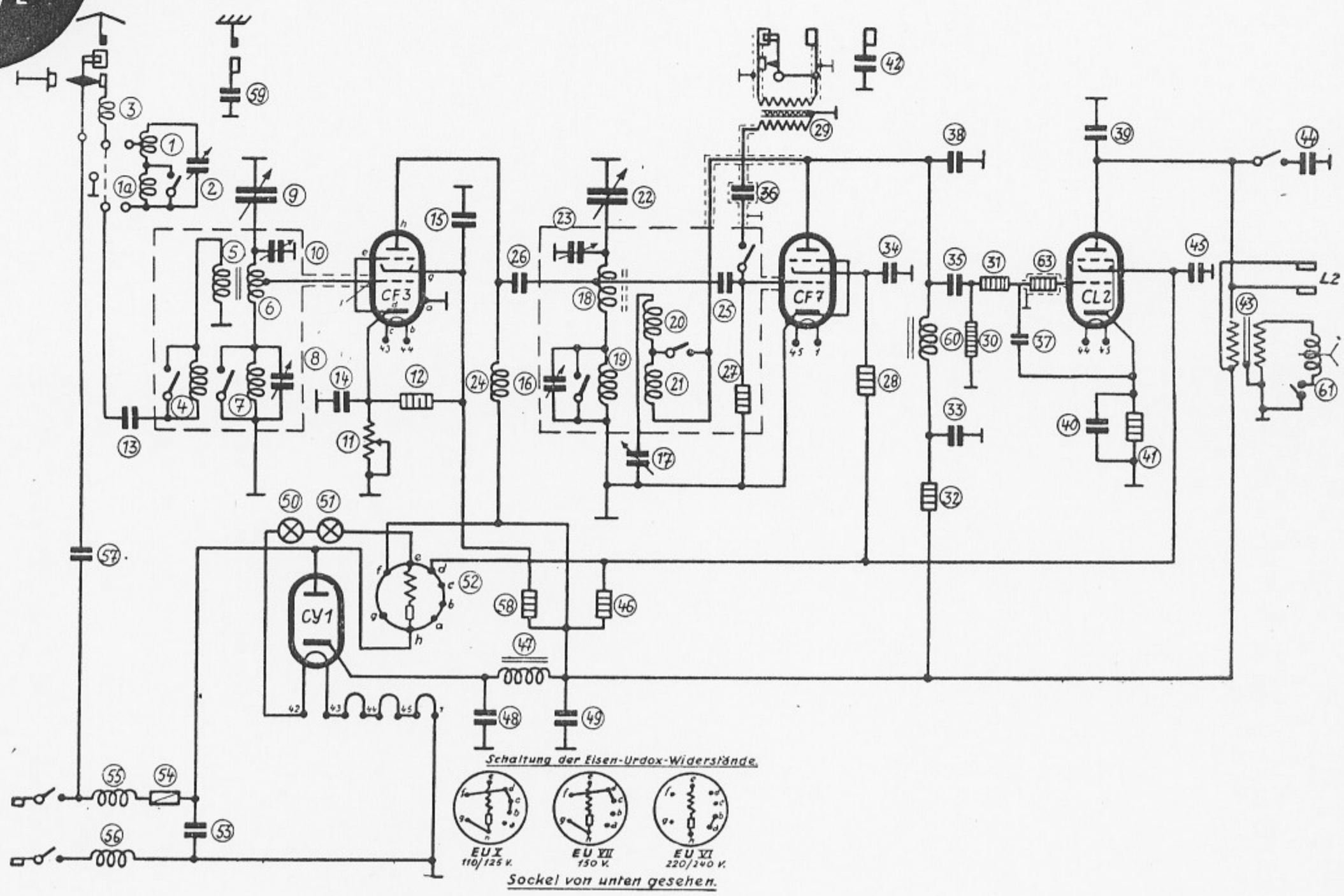


| | | | | | | | | | | | | | | | |
|---|---|---|---|---|---|---|---|---|---|---|---|---|---|---|---|
| 2 | 500 pF | 26 | 5000 pF | 35 | 5000 pF | 42 | 5000 pF | 34 | 0,5 mF |
| 11 | 200 Ohm | 27 | 1,5 MOhm | 36 | 5000 pF | 44 | 15.000 pF | 57 | 250 pF |
| 12 | 30.000 Ohm | 28 | 0,4 MOhm | 37 | 100 pF | 45 | 0,5 mF | 58 | 15.000 Ohm |
| 13 | 1000 pF | 30 | 0,3 MOhm | 38 | 100 pF | 46 | 20.000 Ohm | 59 | 5000 pF |
| 14 | 0,5 mF | 31 | 0,3 MOhm | 39 | 1000 pF | 48 | 8 mF | 63 | 100 Ohm |
| 15 | 0,5 mF | 32 | 80.000 Ohm | 40 | 10 mF | 49 | 8 mF | | |
| 23 | 50 pF | 33 | 0,5 mF | 41 | 400 Ohm | 53 | 0,1 mF | | |

| BUIS | K | G2(4) | G3(5) | A | Atr | K | G2(4) | G3(5) | A | Atr |
|---|---|---|---|---|---|---|---|---|---|---|
| 220V: CF 3 (max.) | 2,5 | 90 | | 200 | | 9,5 | 2,5 | | 7 | |
| " (min.) | 50 | 135 | | 200 | | | 0 | | 0 | |
| 110V: CF 3 (max.) | 1 | 40 | | 95 | | | 1 | | 1 | |
| " (min.) | 25 | 60 | | 95 | | | 0 | | 0 | |
| 220V: CF 7 | 0 | 15 | | 100 | | | 0,2 | | 0,6 | |
| 110V: " | 0 | 15 | | 30 | | | 0,2 | | 0,6 | |
| 220V: Cl 2 | 14 | 95 | | 180 | | 35 | 5 | | 30 | |
| 110V: " | 13 | 95 | | 80 | | 33 | 5 | | 28 | |
| 220V: CY 1 | 210 | | | | | | | | | |
| 110v: CY 1 | 105 | | | | | | | | | |